US Army Corps
of Engineers
Louisville District

Miter Gate

Anchorage Modifications

US Army Corps
of Engineers
Louisville District

Existing Miter Gate Anchorage Connection

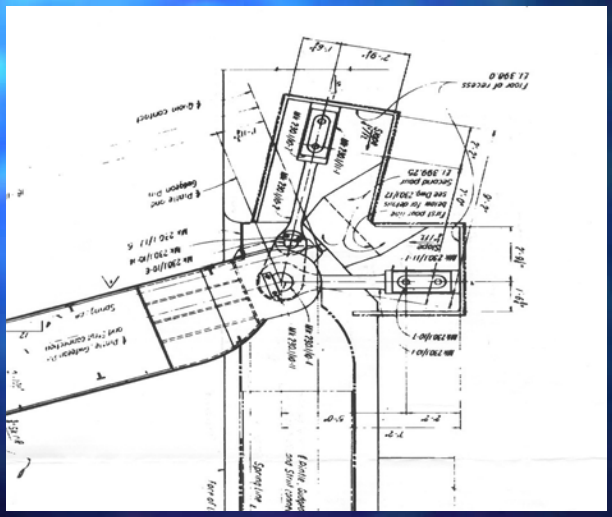

US Army Corps of Engineers
Louisville District

Embedded Steel Footing

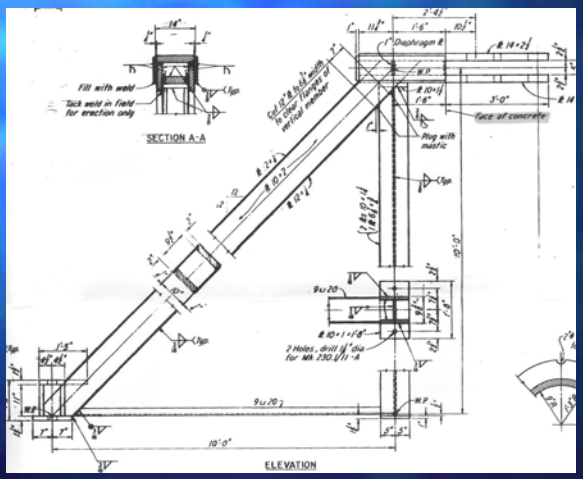

US Army Corps of Engineers
Louisville District

Existing Anchorage Connection Detail

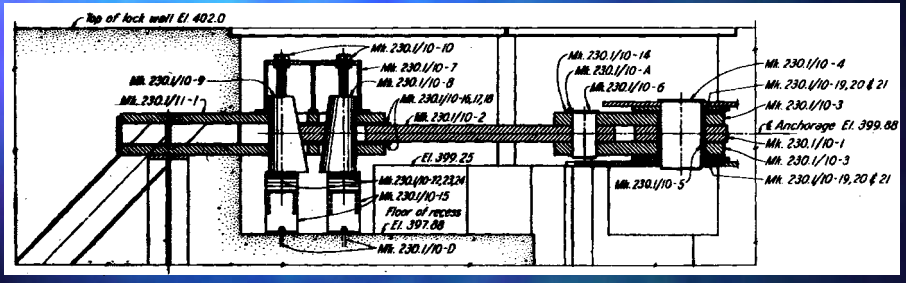

US Army Corps of Engineers
Louisville District

Exposed Anchorage Connection

US Army Corps of Engineers
Louisville District

Exposed Anchorage Connection

US Army Corps of Engineers
Louisville District

Exposed Anchorage Connection

US Army Corps of Engineers
Louisville District

Removing Miter Gate

US Army Corps of Engineers
Louisville District

Miter Gate Removal

US Army Corps of Engineers
Louisville District

Positioning Miter Gate into Maintenance Slots

US Army Corps of Engineers
Louisville District

Positioning Miter Gates into Maintenance Slots

US Army Corps of Engineers
Louisville District

Old Anchor Removed

US Army Corps of Engineers
Louisville District

Milling Existing Anchor Head

US Army Corps of Engineers
Louisville District

Redesigned Anchorage Casting

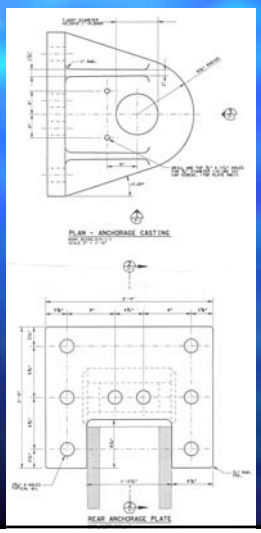

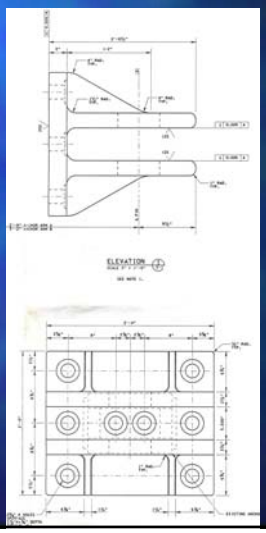

US Army Corps of Engineers
Louisville District

Assembled Anchorage Modification

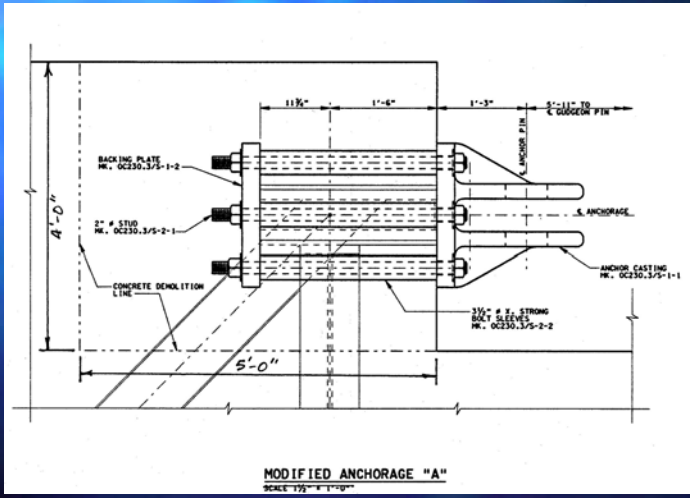

US Army Corps of Engineers
Louisville District

New Anchor Head Attached to Existing Embedded Steel

US Army Corps of Engineers
Louisville District

Rear View Showing Bolt Locations

US Army Corps of Engineers
Louisville District

Torqueing Anchor Bolts

US Army Corps of Engineers
Louisville District

Anchor Modification Completed

US Army Corps of Engineers
Louisville District

Reinforcing for Concrete Installation

US Army Corps of Engineers
Louisville District

Anchor Head Connected to Eyebar

US Army Corps of Engineers
Louisville District

Gate Connections Complete

US Army Corps of Engineers
Louisville District

ANCHORAGE MODIFICATION COMPLETED

US Army Corps of Engineers
Louisville District

Benefits

- Replaces existing worn out anchorage
- Decreases lock closure during maintenance
- Decreases cost to towing industry
- Decreases project cost