# MELDAHL UPPER AUX. Miter Gate Replacement

Presented by:  Steve Hann

# Meldahl Miter Gate Replacement

# Meldahl Miter Gate Replacement

# Meldahl Miter Gate Replacement

# Meldahl Miter Gate Replacement

# Meldahl Miter Gate Replacement

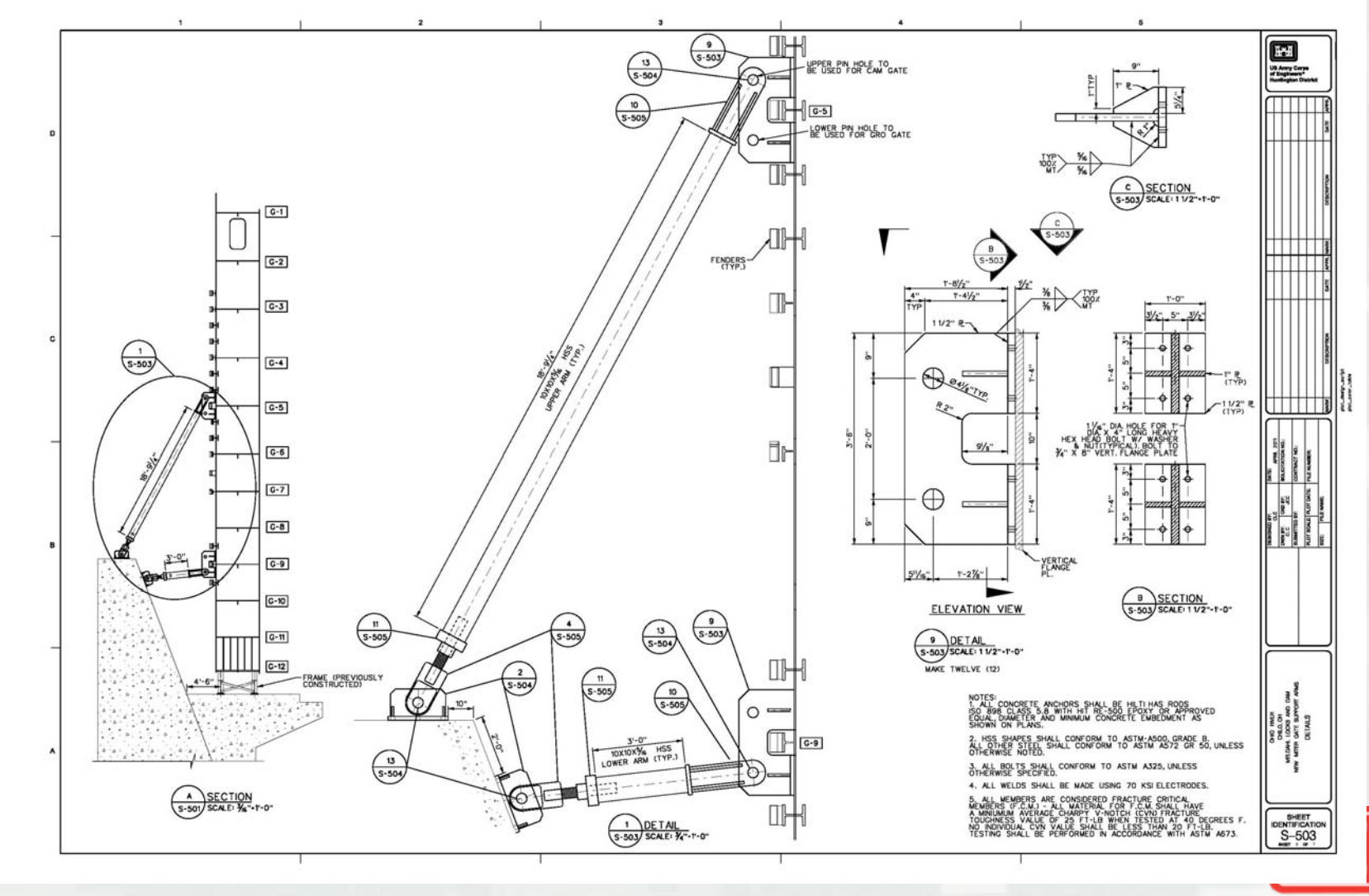

# Meldahl Miter Gate Replacement

- Reported to CAM 15 August
  - Entire Aux. chamber dewatered and upper and lower gates inspected
  - Upper gates determined to be in worse condition
  - Bulkheads pulled and moved to upper end. Isolated upper gates with EM gates and bulkheads and dewatered again
  - Lost time: 3 ½ weeks

# Meldahl Miter Gate Replacement

- Lifting Lugs installed on Upper gates
- Upper gates removed and placed on Shreve 9 Sept 2011.
- Transported to scrap facility and offloaded
- GRO Main-Will be completed prior to arrival

# Meldahl Miter Gate Replacement

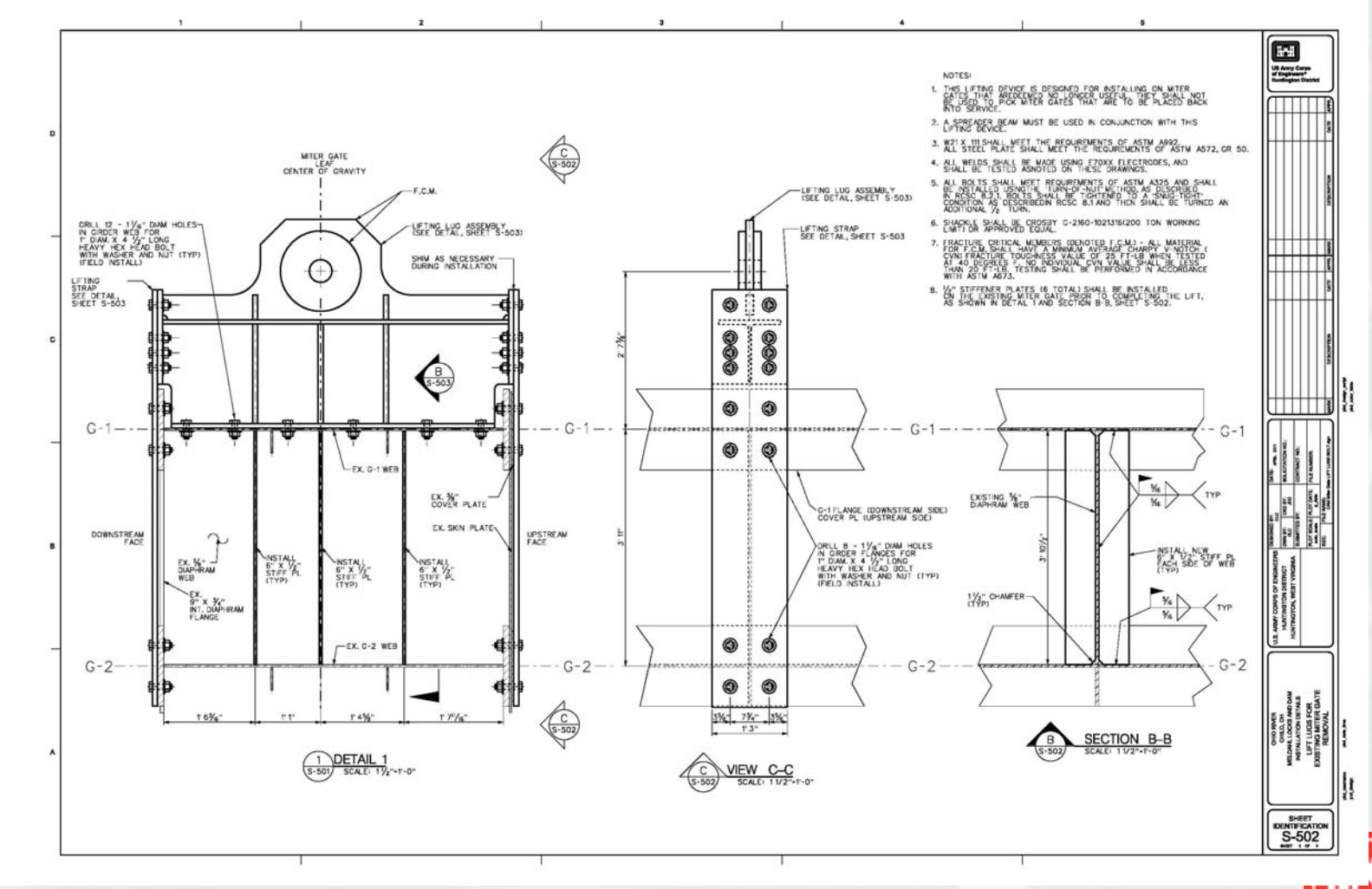

# Meldahl Miter Gate Replacement

- Concrete cutting contractor on-site 12 September 2011.
- Began removal of top anchorage concrete
- Removal completed 30 Sept 2011
- GRO Main-Work to be completed prior to arrival

# Meldahl Miter Gate Replacement

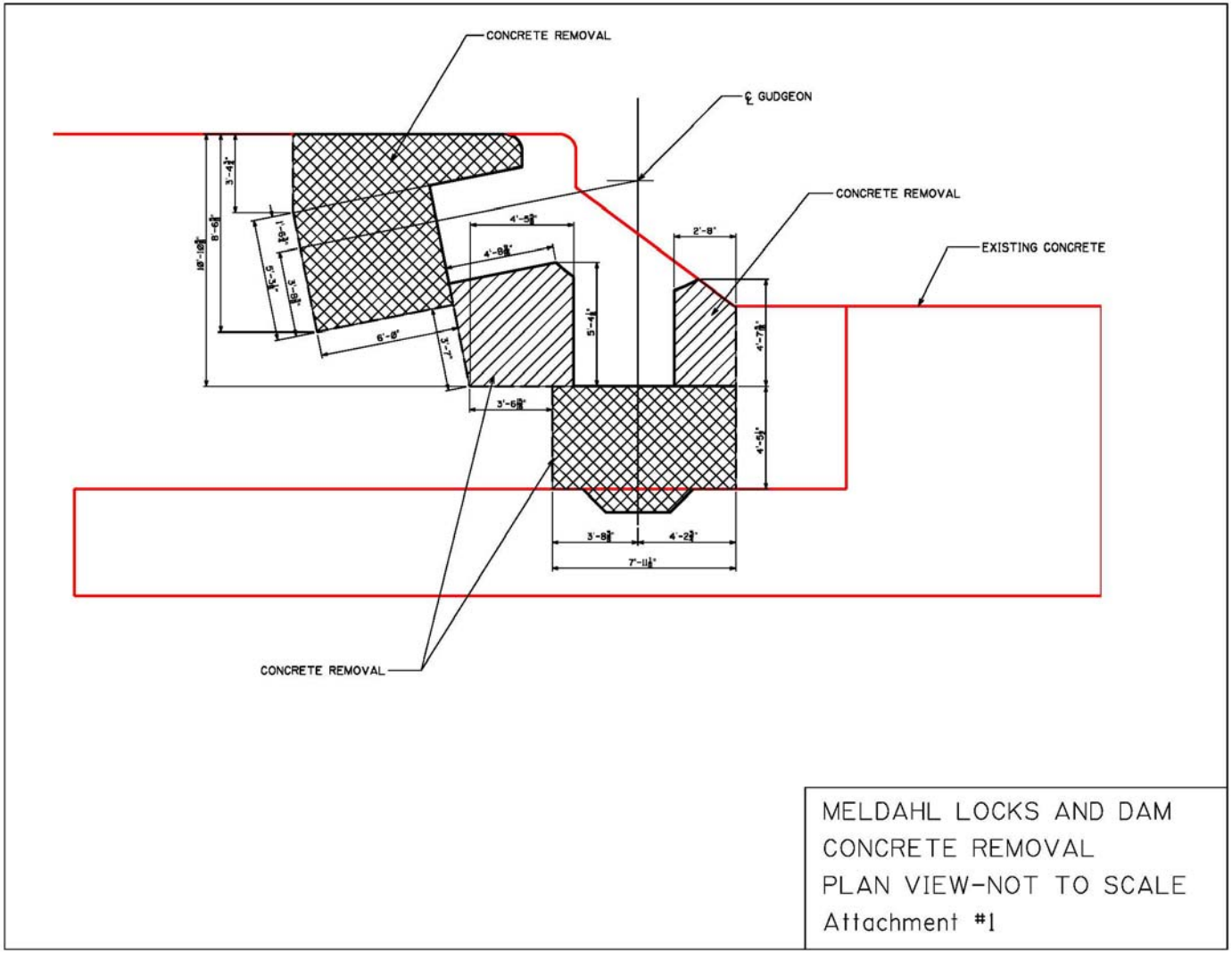

# Removal of Concrete

Concrete removed from embedded anchorage area to expose upper section

# Top Anchorage

Top Anchorage prepared for addition of new weldment –Top will be milled down to final elevation

# Meldahl Miter Gate Replacement

- Began removal embedded wall quoin concrete 4 Oct 2011
- Removal completed 4 Nov 2
- GRO Main- Allowing 17 days

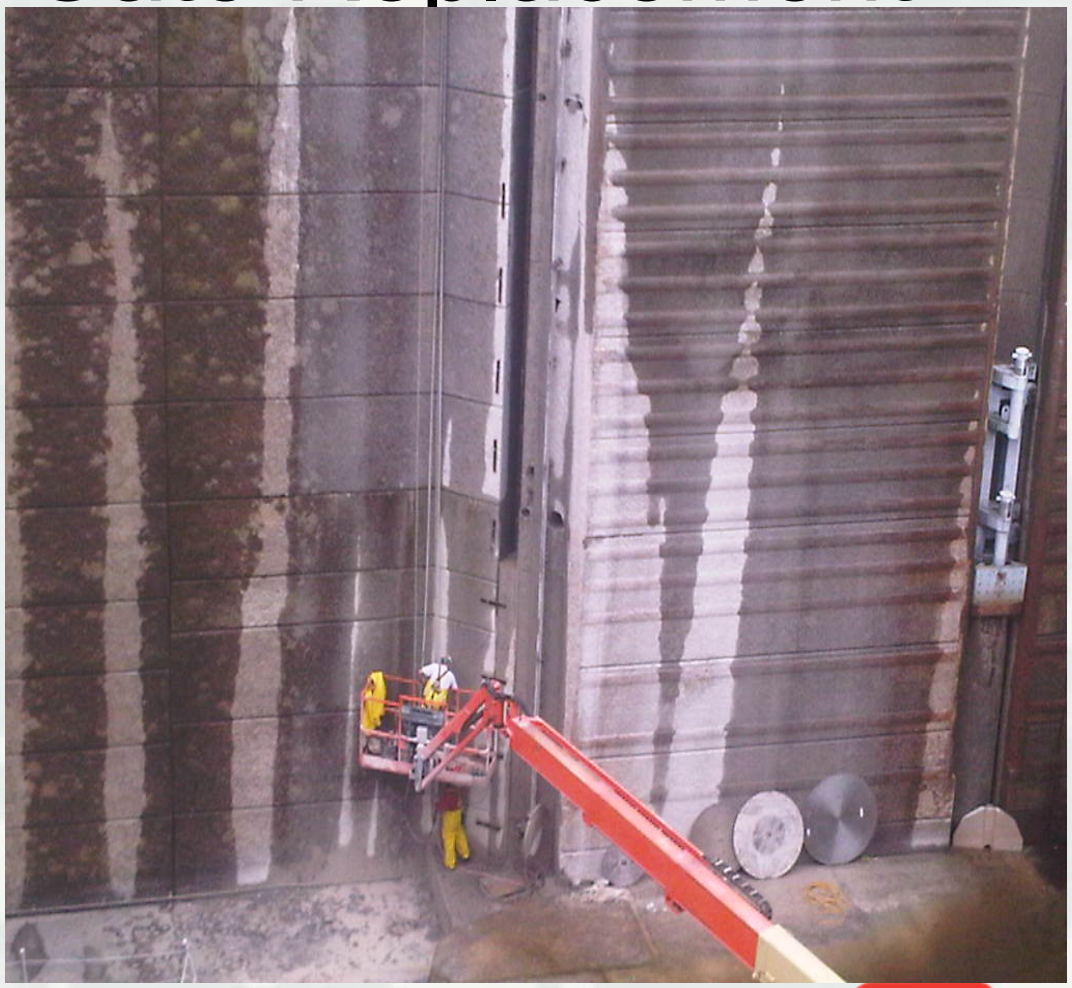

# Meldahl Miter Gate Replacement-Remaining work

- Install new embedded wall quoin
  - Install anchor rods and re-bar
- Install formwork
  - Pour Self consolidating concrete
- Install new pintle base and ball
- Install miter gate sill extension
- Install Gates
  - Stress Diagonals
  - Install contact blocks
- Adjust top Anchorage
- Install walkway etc.

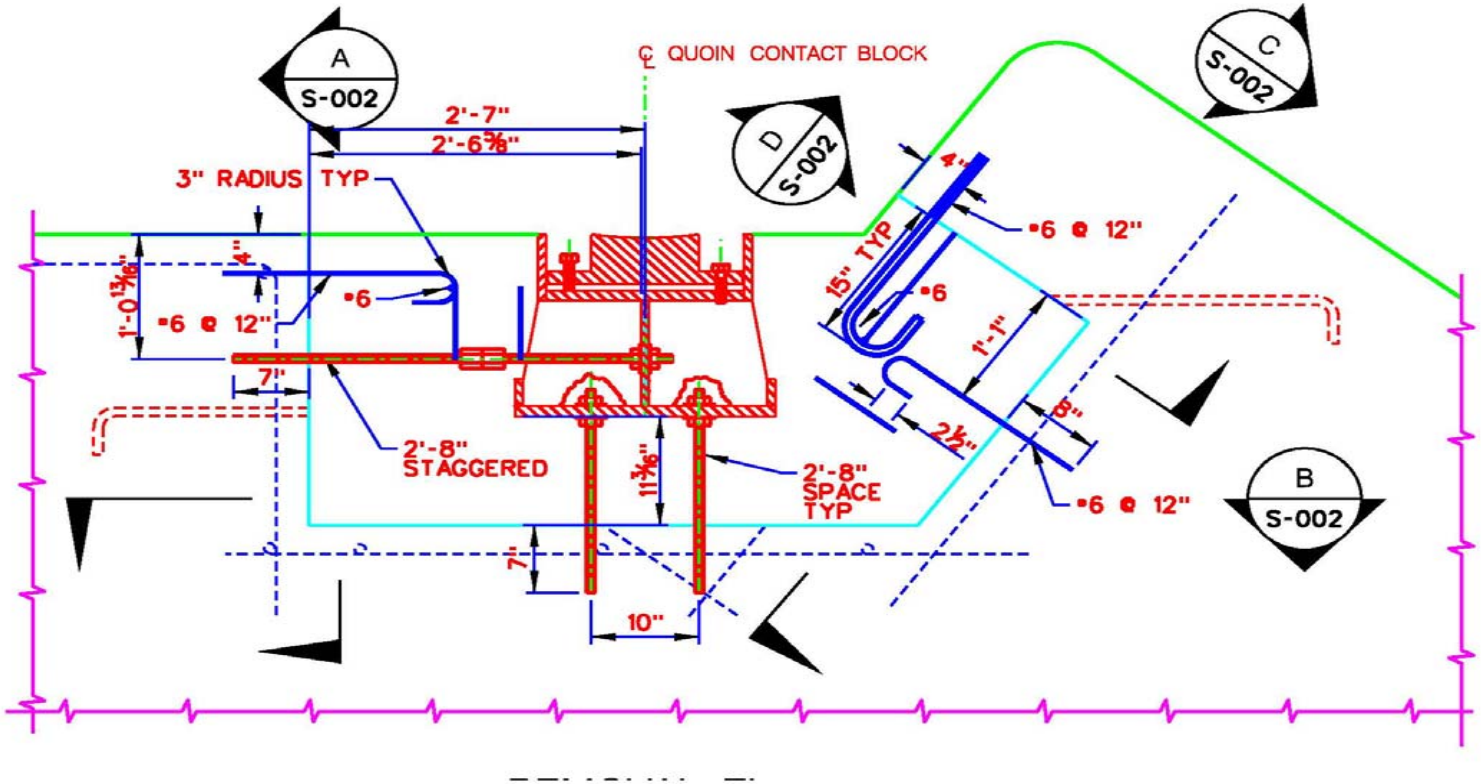


# Embedded Wall Quoin

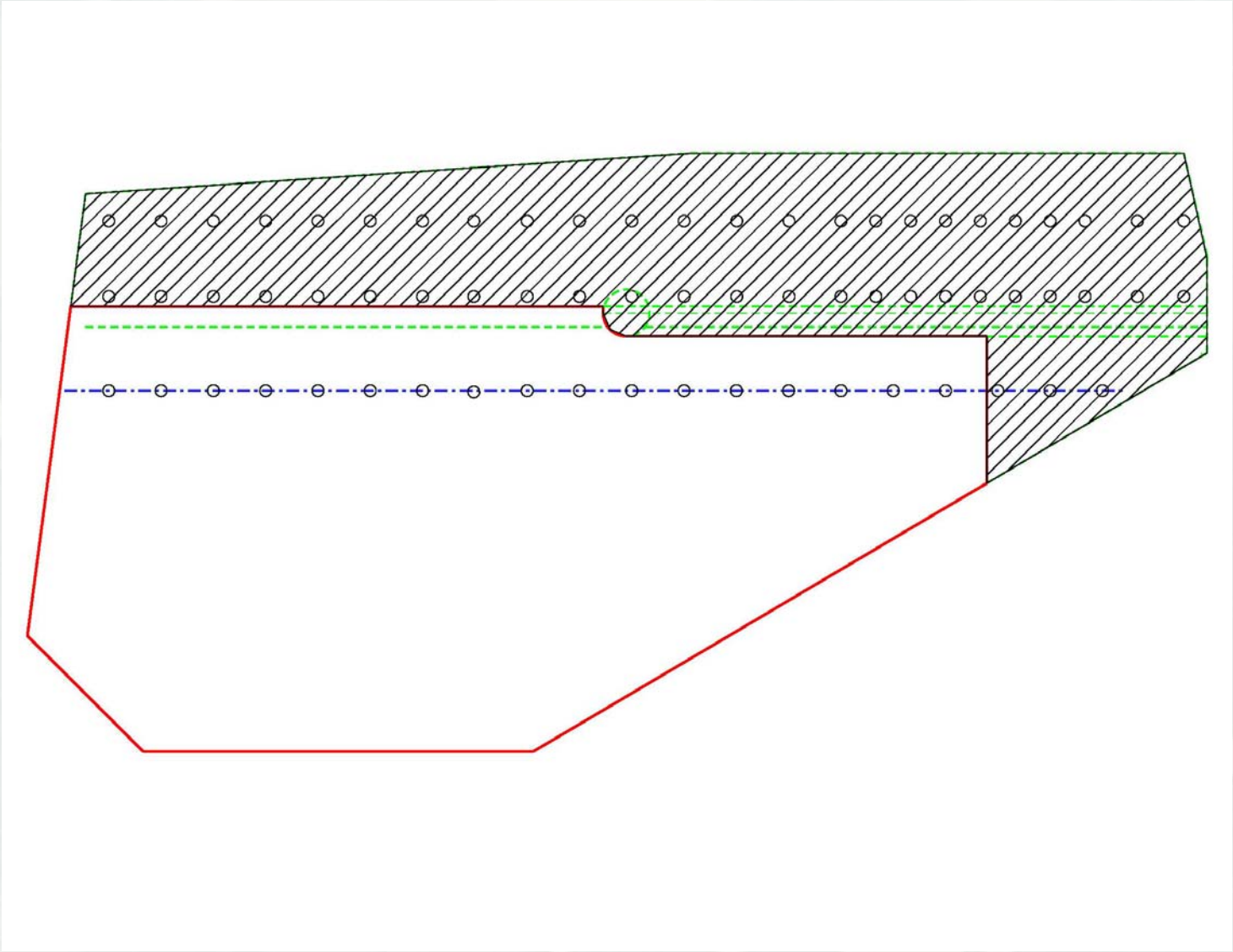

# Old Top Anchorage Design

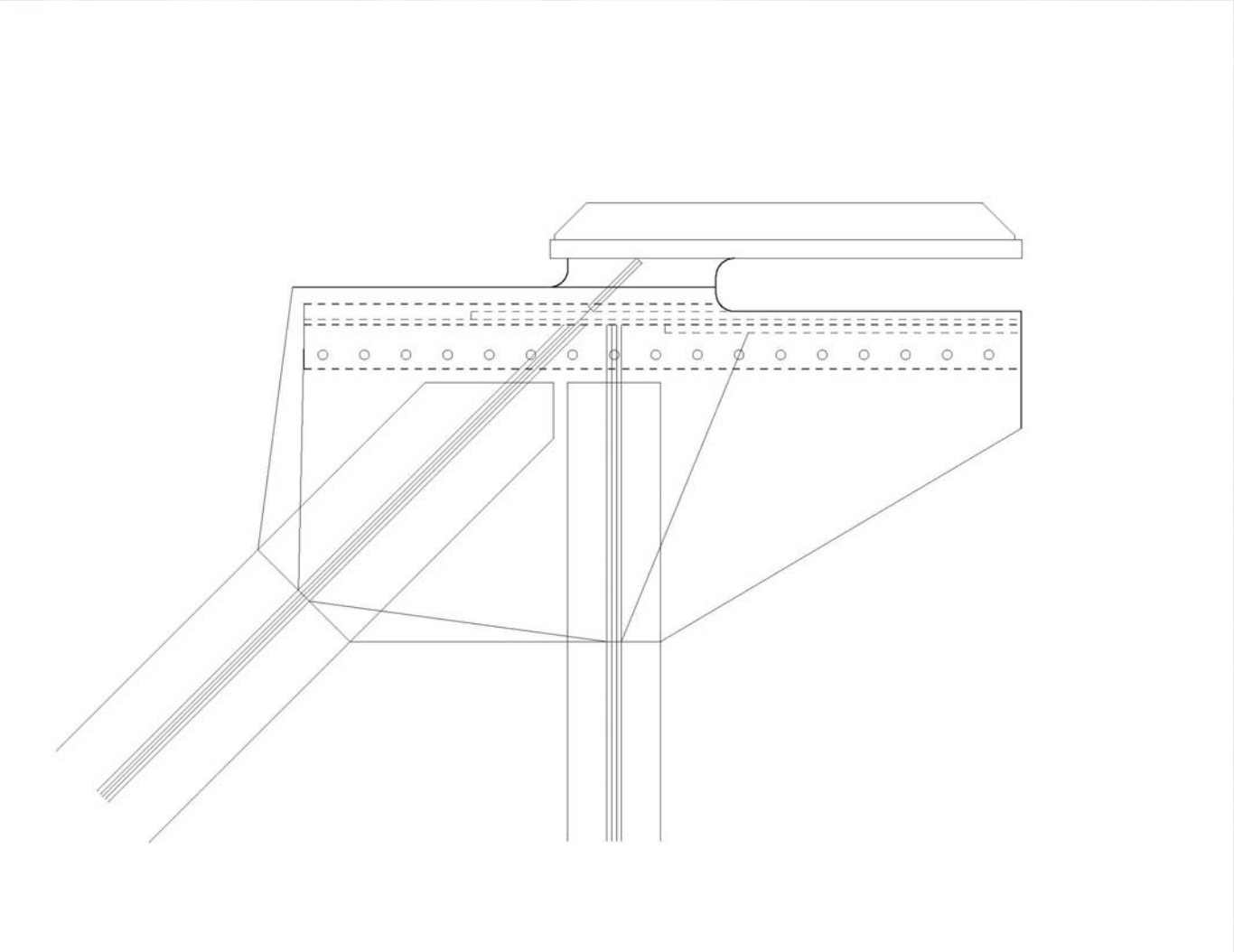

# New Top Anchorage Design

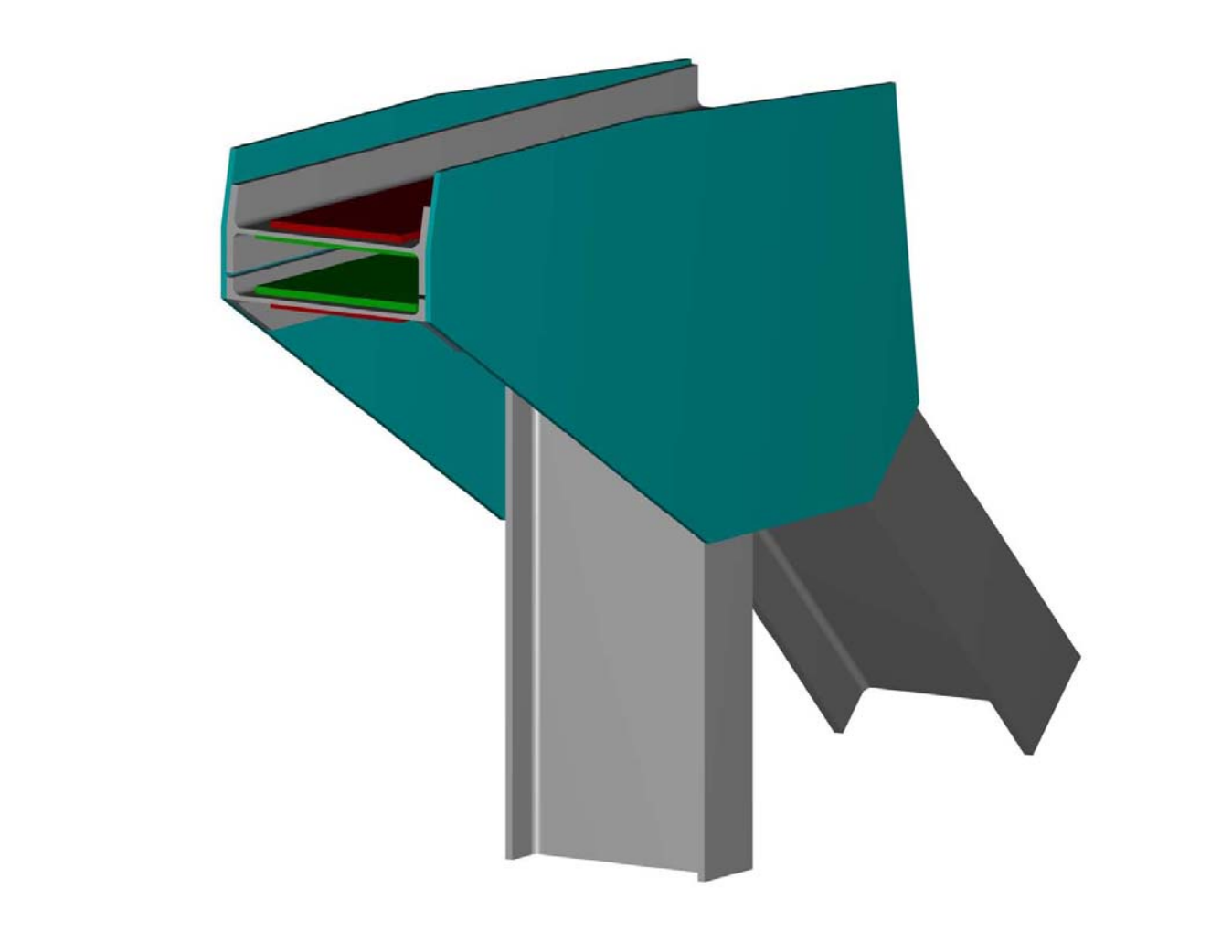

# Old Top Anchorage Design

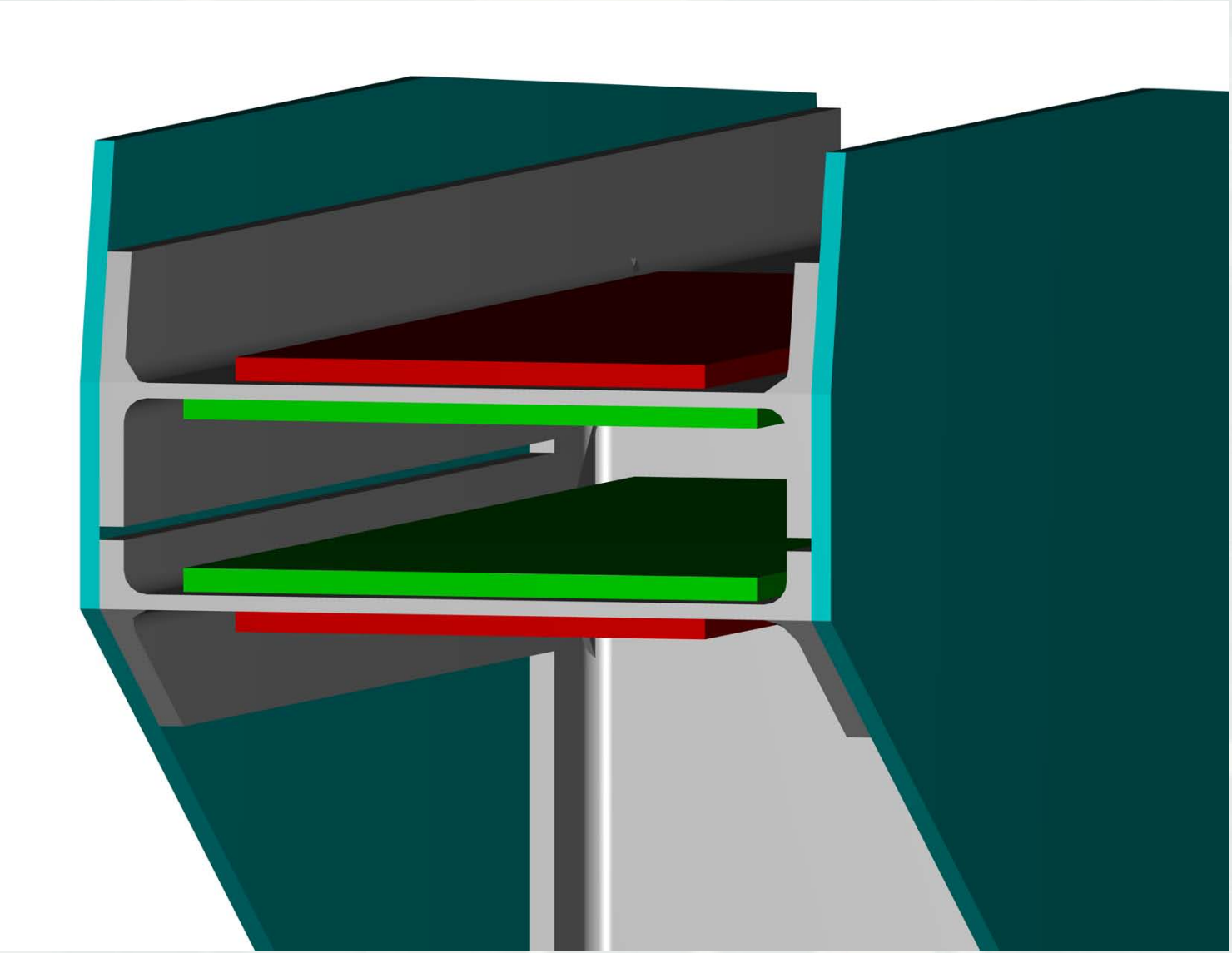

# Old Top Anchorage Design

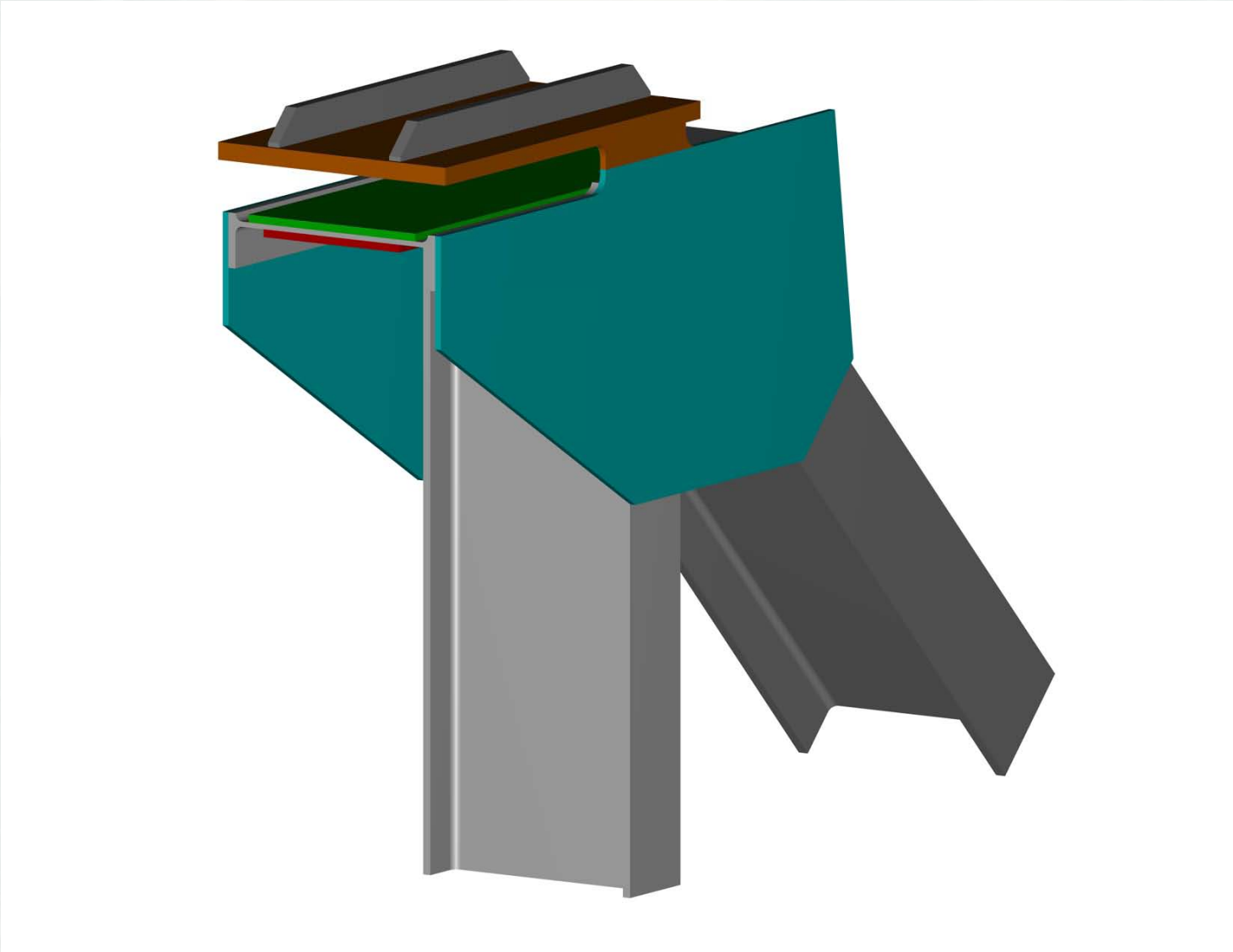

# New Top Anchorage Design

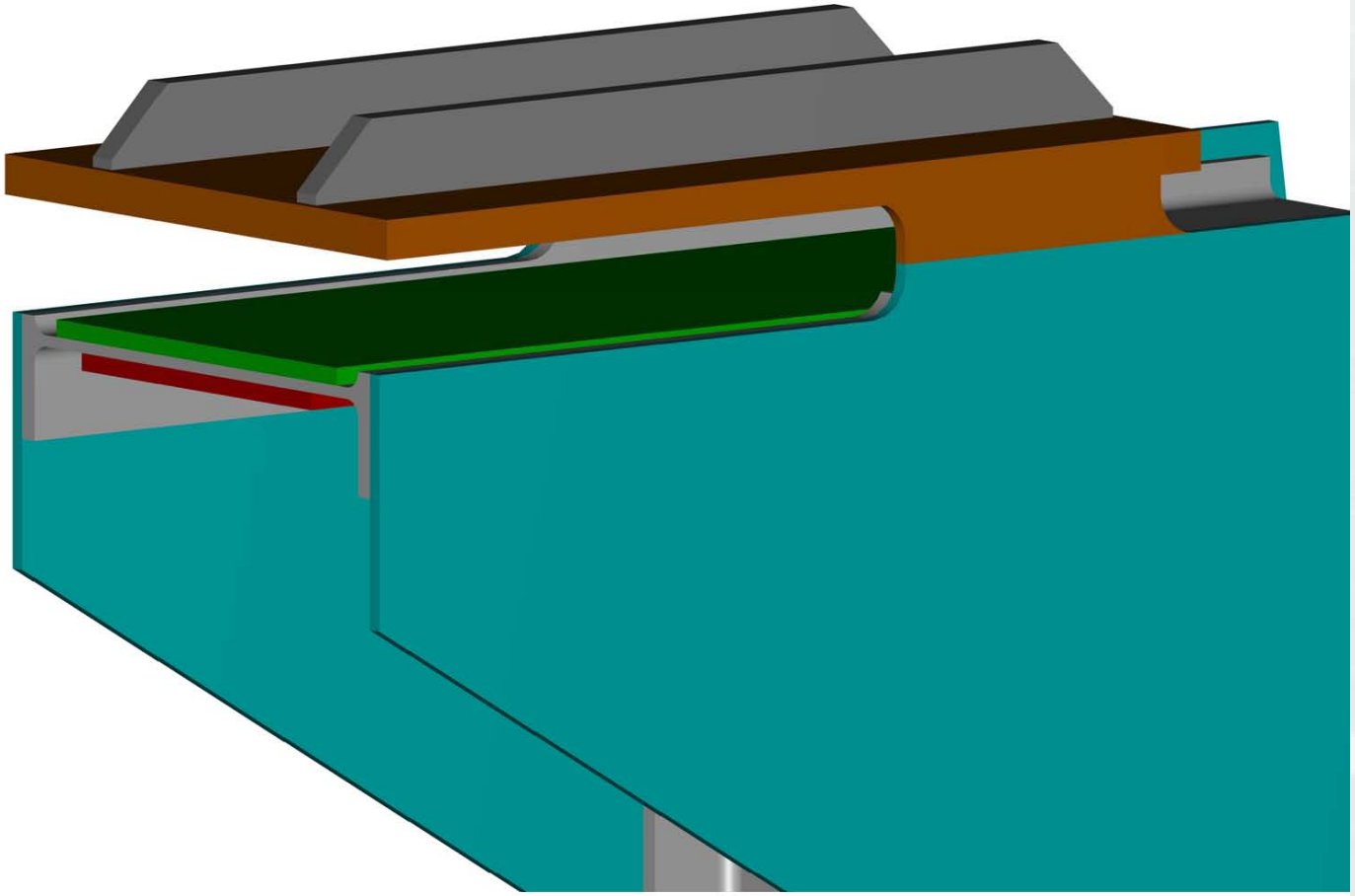

# New Top Anchorage Design

**Modify front wedge pin hole to accept new round pin**

# New Top Anchorage Design

# Strain Gauge Installation-WES

- WES personnel installed all conduit and gauges
- Time: 5 Weeks
  - Installation was difficult due to working from crane and/or manlifts
  - Placement of conduit was changed on-site due to installing from top-down. Placing behind members of gate for protection was not an option
- GRO-Modifying contract to have fabricator install all conduit, conduit bodies etc.
  - Will be able to protect conduit behind gate members
  - WES personnel will pull wires and attach gauges to gate

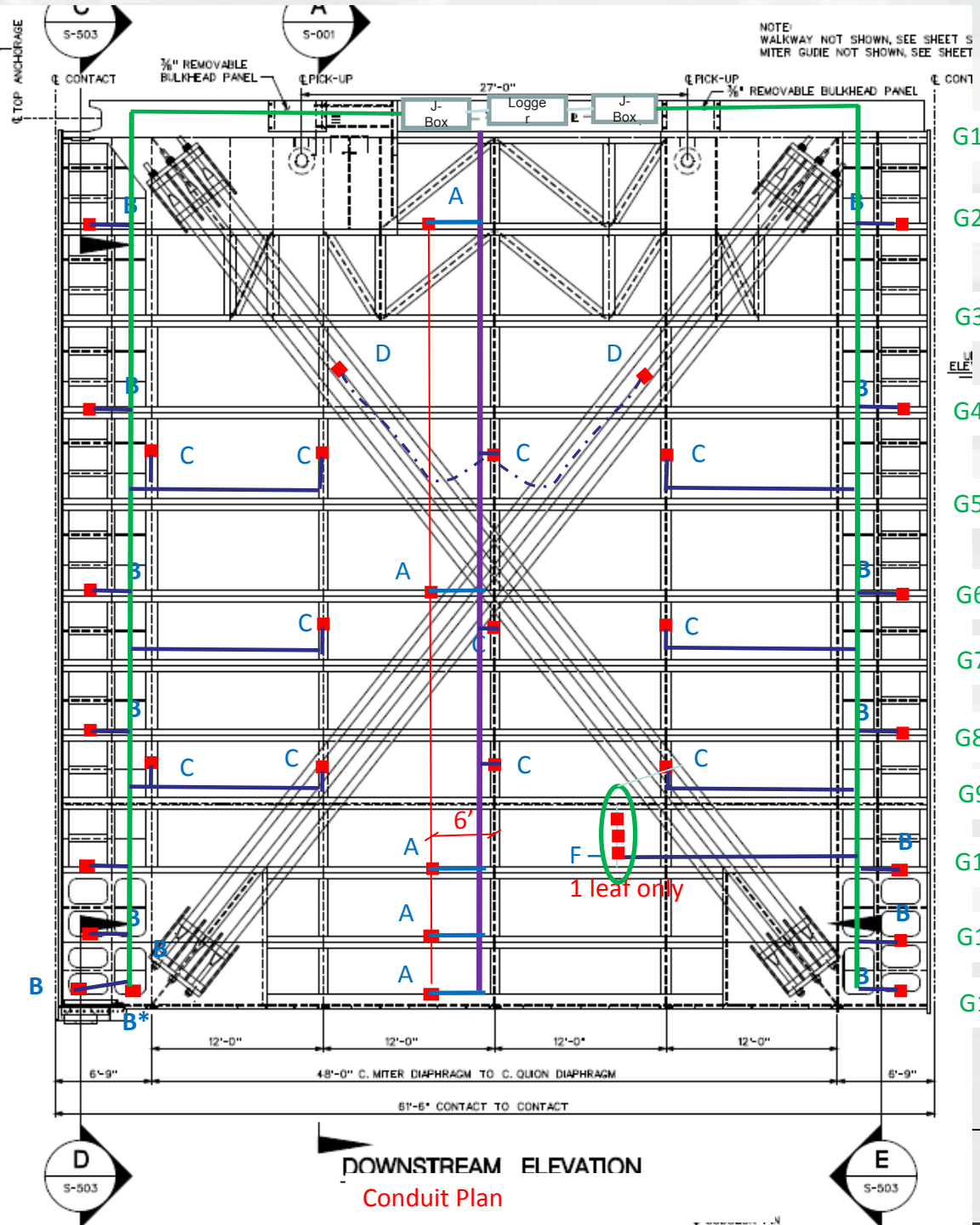


G1

G2

G3

G4

G5

G6

G7

G8

G9

G10

G11

G12

2" Conduit
1-1/2" Conduit
1" Conduit
3/4" Conduit

Type "T" Conduit Body

Type "X" Conduit Body

Type "C" Conduit Body

Gages at Position A will require:

1 – 2" Type T Conduit Body
1- 2"to 1" Reducing Bushing
1- 1" Type T Conduit Bodies
1- 1" Type X Conduit Bodies
4 – 1" to ½" Reducing Bushings
4- 3/8" tubing to ½" NPT Adapters

Gages at Position B, C, and F will require (per gage):

1 – 1.5" Type T Conduit Body
1- 1.5"to 0.75" Reducing Bushing
1- 0.75" Type T or Type C Conduit Body
1 – 0.75" to ½" Reducing Bushings
1- 3/8" tubing to ½" NPT Adapters

The main conduit run near the center of the gate will need to be 2" to accommodate the number of wires to be pulled at that location. The other two main verticals can ne 1.5"

BUILDING STRONG®

# Strain Gauge Installation-WES

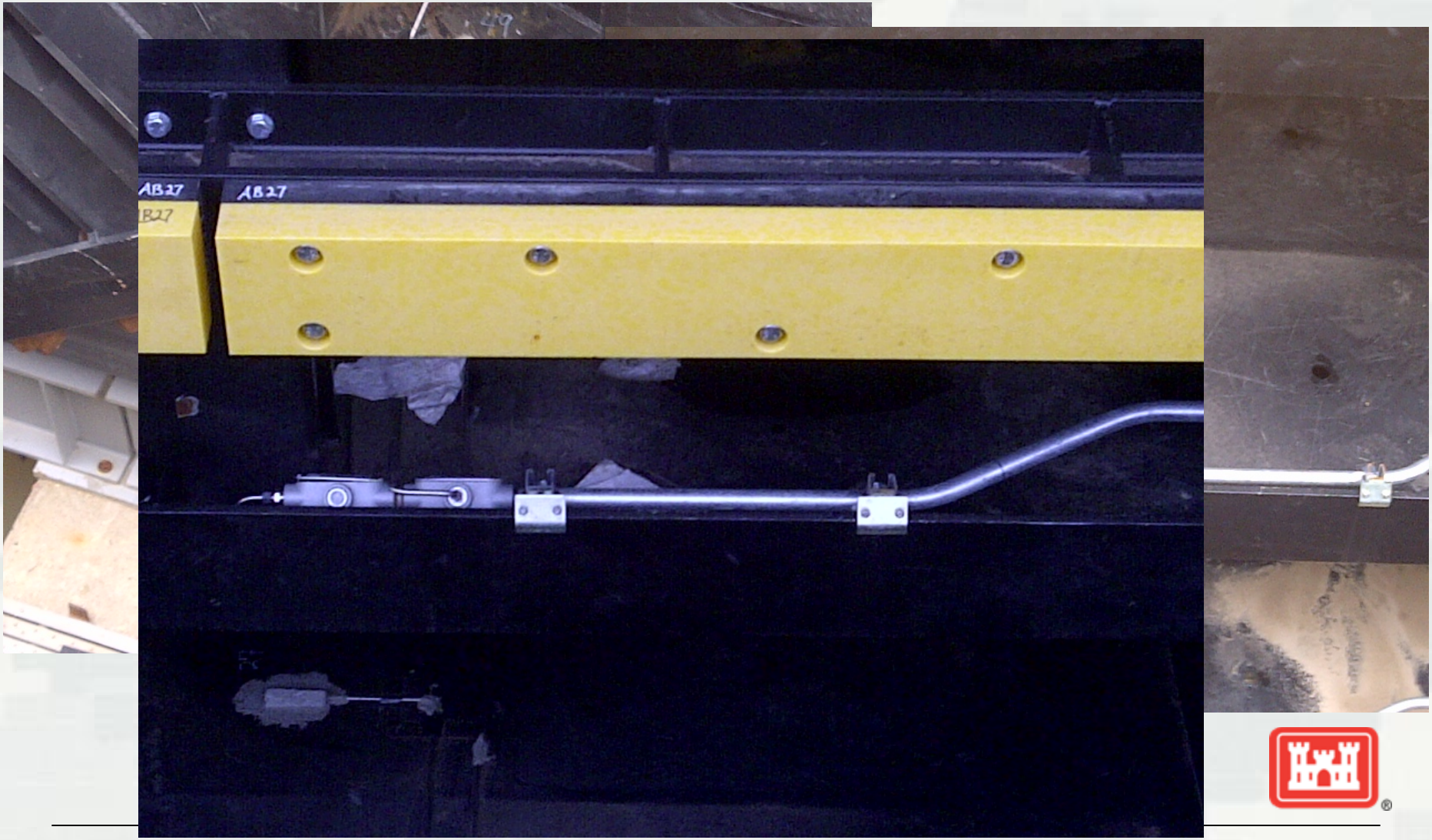

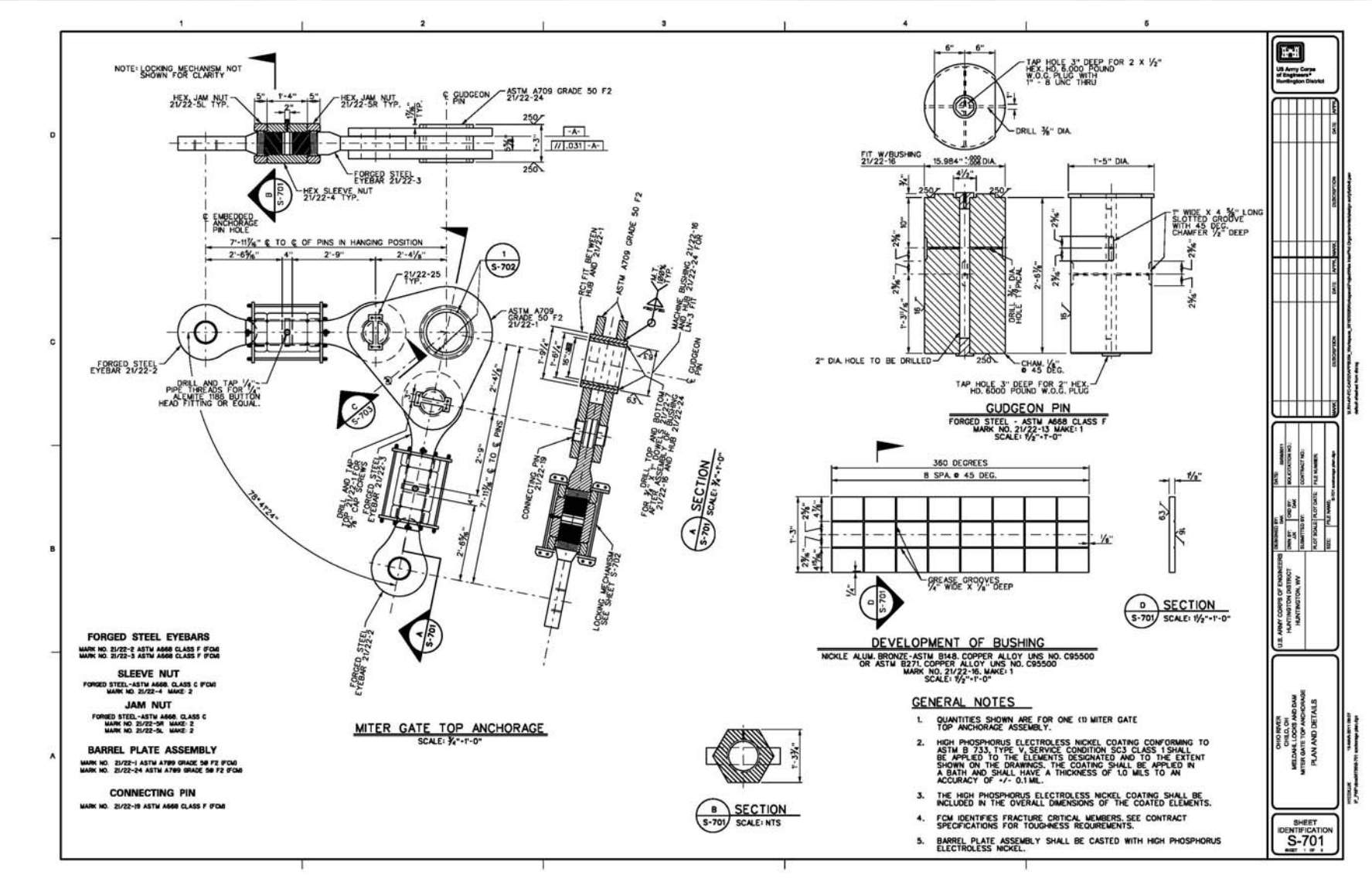


# New Top Anchorage Design

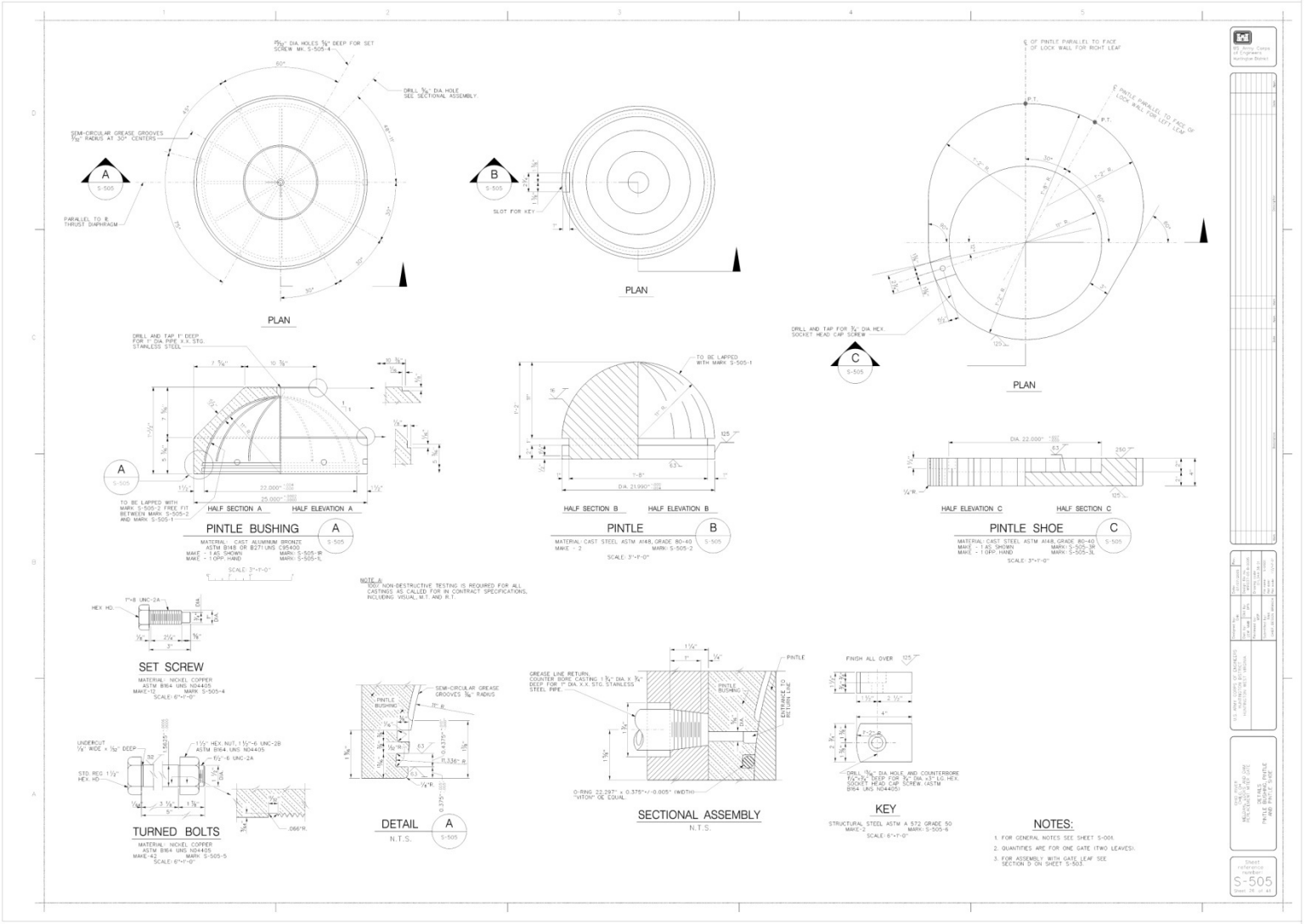


# New Pintle Base Design

BUILDING STRONG®

# Lessons Learned & Delays

- Concrete cutting around top anchorage should be completed before shutdown of chamber.
  - Ensure quoin area concrete cutting is completed with 24 hr coverage (Time savings of 2.25 weeks)
- Pre-Fabricate new top anchorage design and all components
  - Pre-fab not completed on first job due to unknowns about the embedded anchorage system.

# Lessons Learned & Delays

- 2 week delay in start of job due to overrun at GRO.
- 3.5 weeks lost time dewatering entire chamber for inspection
- Concrete cutting contractor-2.25 week overage
- 4 weeks total lost time due to flooding events

# QUESTIONS??????